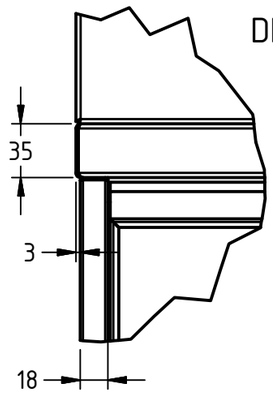


DETAIL F ( 1 : 4 )

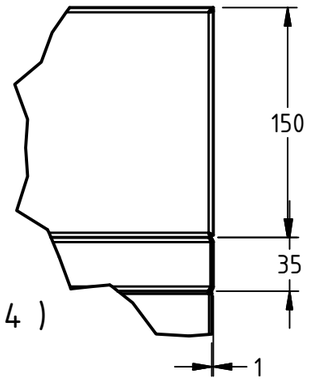


DETAIL E ( 1 : 4 )

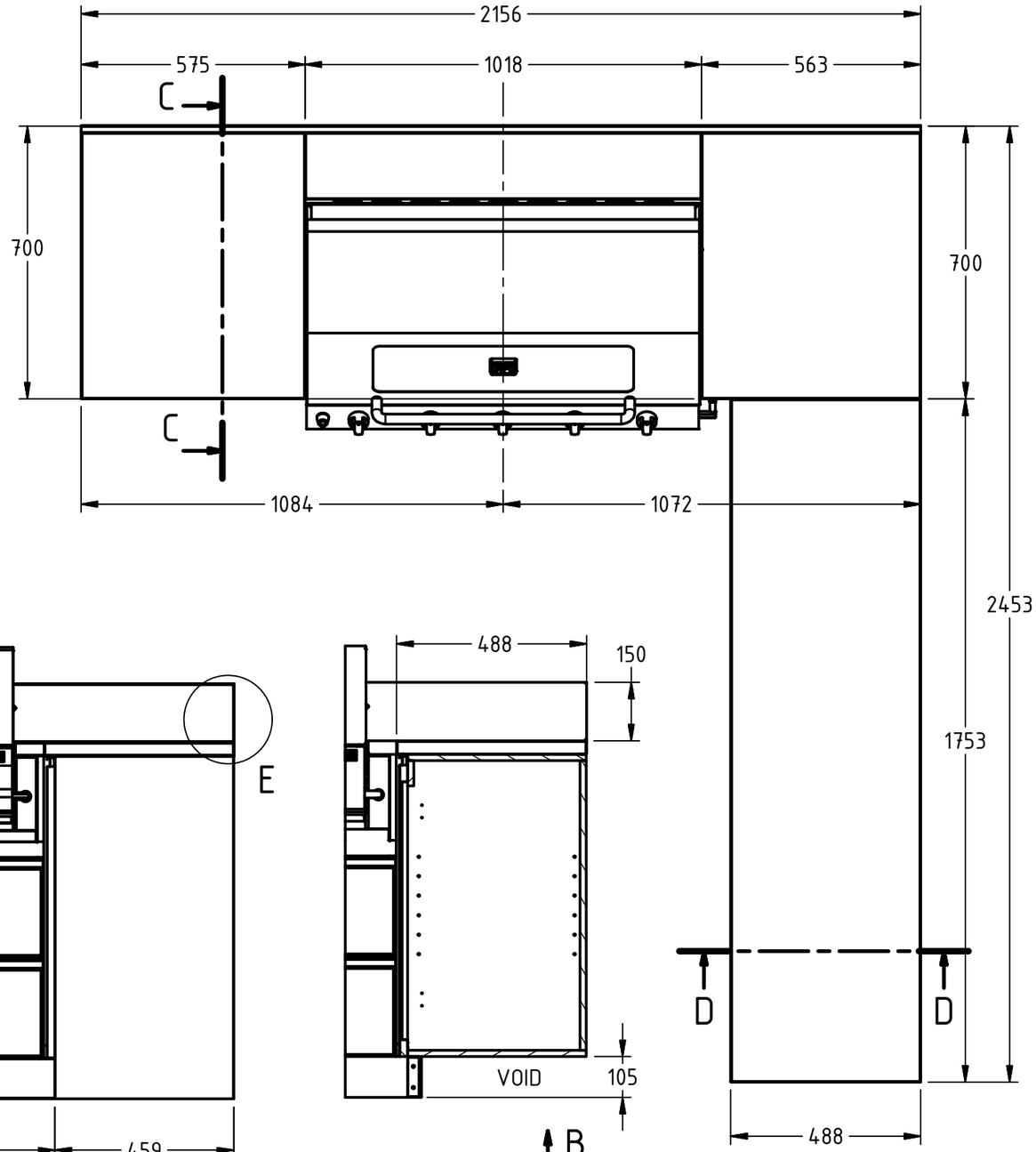


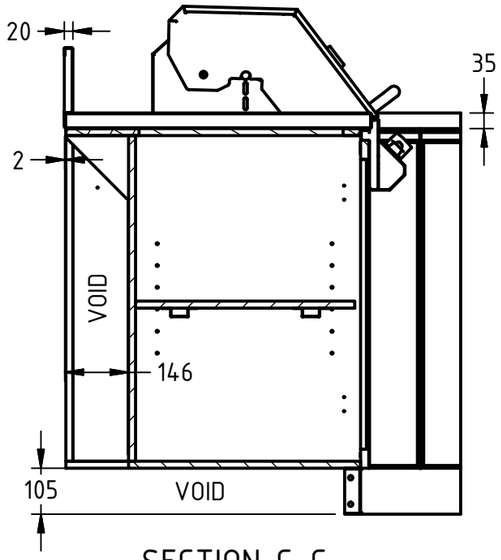


SECTION C-C
( 1 : 14 )

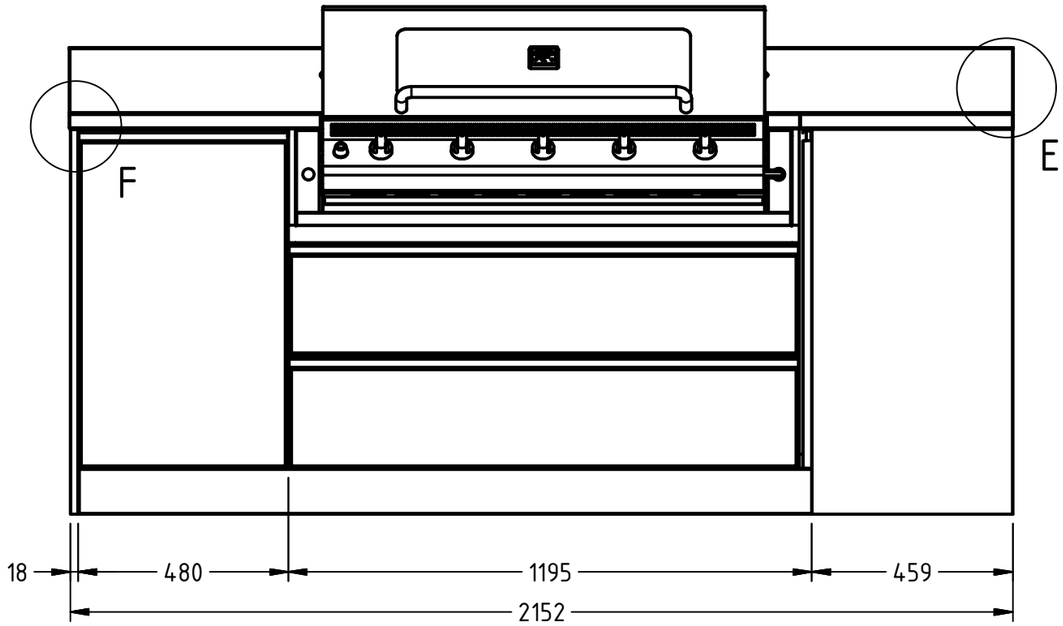


AUX. B ( 1 : 14 )




SECTION D-D
( 1 : 14 )

| | | | | | |
|---|---|---|---|---|---|
| Title: | Lifestyle Modular "DESIGNER SERIES" Outdoor Kitchen | | | | |
| Customer Name: | "Richmond" | | | Approved: | [Signature] |
| Job Number: | | | | Date: | |
| ABM Representative: | | Date: | | Lifestyle The Australian Barbeque | |
| Designed By: | | Date: | | | |
| Approved By: | | Date: | | | |

| | GEN. TOL | |
|---|---|---|
| | Linear | Angular |
| X | ± 1.0 | ± 2° |
| X.X | ± 0.6 | ± 1° |
| X.XX | ± 0.25 | ± 0.5° |