BI KIT - 5

Also known as the Premium Built in Kit because it's the easiest and best looking way to build a Lifestyle BBQ into a new outdoor kitchen. We use it in our Designer Series outdoor kitchens.

BI Kit - 5 (Premium Built In Kit)

Barbeque Sizes	Minimum Cabinet Recess Width, RWI (mm)	Minimum Width Between Benchtop Edges, RW2 (mm)
2 burner	654	540
3 burner	814	700
4 burner	974	860
5 burner	1134	1020

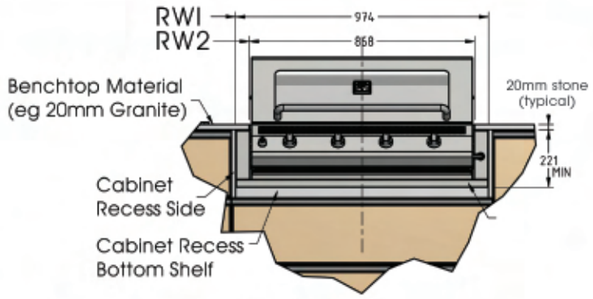

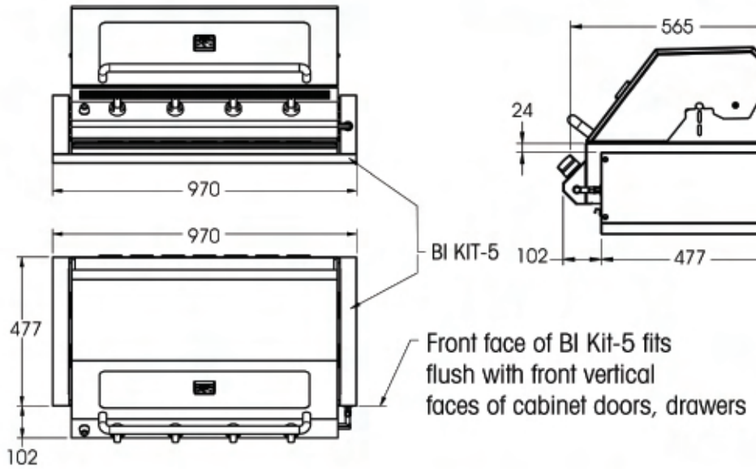

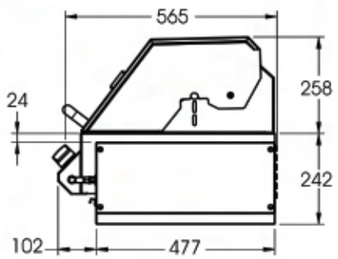

Front View

1. Note difference between "Cabinet Recess Width" RW1 and "Width Between Benchtop Edges", RW2
2. Benchtop material overlays cabinets and stainless steel BI KIT - 5

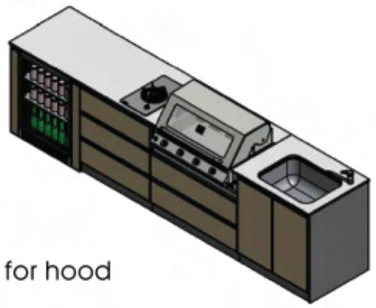

Note: If fitted with roasting hood (as shown) add 60mm clearance for hood to pivot open without interfering with wall behind.

IMPORTANT: For trouble free installation order your BBQ to be shipped directly to your fabricator before cutting stone benchtops.

BI KIT - 4

For an existing cavity that you can't find a BBQ size to match, the BI KIT - 4 is just what you need. A 100mm stainless steel flange with a 70mm vertical return will allow you to fit the closest size Lifestyle BBQ and cover off any gaps.

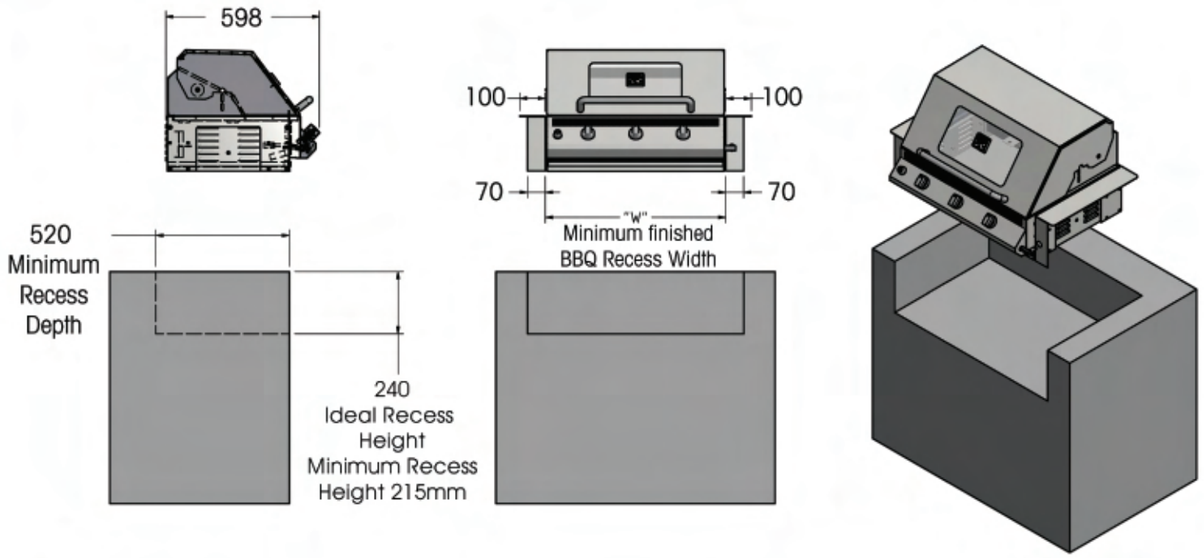

Minimum Recess Width - RW1

Barbeque Size	"W"
2 burner Built-In Barbeque	565
3 burner Built-In Barbeque	725
4 burner Built-In Barbeque	885
5 burner Built-In Barbeque	1045

Minimum Recess Width - RW2

Barbeque Size	"W"
2 burner Built-In Barbeque	740
3 burner Built-In Barbeque	900
4 burner Built-In Barbeque	1060
5 burner Built-In Barbeque	1220

Note: This table includes 2 x 70mm for vertical flanges.

Note:
If fitted with roasting hood (as shown) add 60mm clearance for hood to pivot open without interfering with wall behind.

IMPORTANT: For trouble free installation order your BBQ to be shipped directly to your fabricator before cutting stone benchtops.

Phone (02) 9773 6245
sales@lifestylebbqs.com
Lifestyle The Australian Barbeque
www.lifestylebbqs.com

BI KIT - 1 (STANDARD BUILT IN KIT)

A simple set of recess brackets to suit new or existing structures. The BI KIT - 1 gives the BBQ a 30mm stainless steel flange on either side so it can rest on the benchtop.

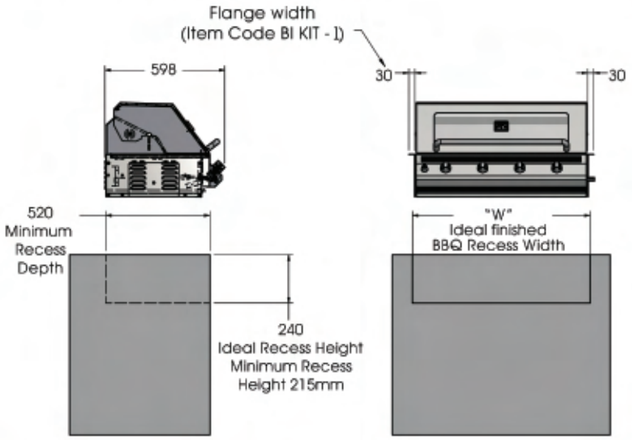

Recommended BBQ Recess Width

Barbeque Size	"W"
Lifestyle 2 burner Built-In Barbeque	565 mm
Lifestyle 3 burner Built-In Barbeque	725 mm
Lifestyle 4 burner Built-In Barbeque	885 mm
Lifestyle 5 burner Built-In Barbeque	1045 mm

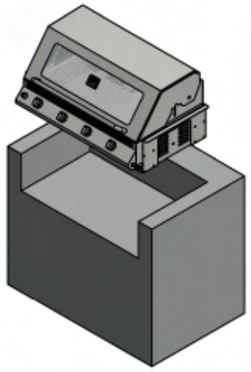

BI KIT - 3

If space is an issue or you're looking for something different then this set of wall mount brackets might be the way to go.

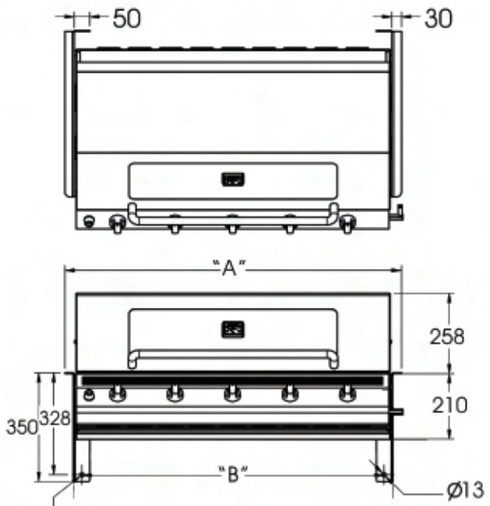

Table

Barbeque Size	"A"	"B"
2 burner Built-In Barbeque	603	493
3 burner Built-In Barbeque	763	653
4 burner Built-In Barbeque	923	813
5 burner Built-In Barbeque	1083	973

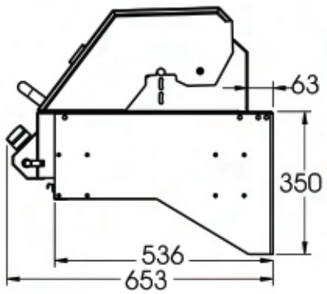

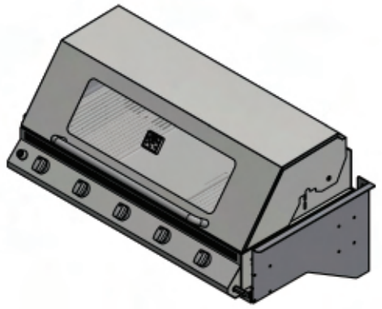

Fitting Instructions:

1. Assemble BI KIT - 3 brackets to LHS and RHS of Barbeque Frame only.
2. Offer to wall and mark wall with hole centres in bracket flanges.

For design, allow widths of:

Barbeque Size	"W"
2 burner	655 mm
3 burner	815 mm
4 burner	975 mm
5 burner	1135 mm

FREE STANDING BUILT IN

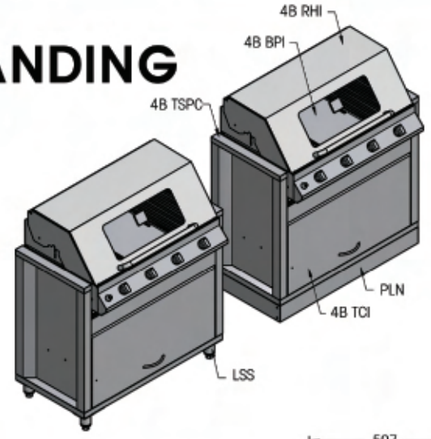

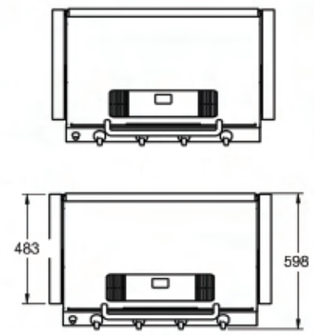

Specify 675mm depth if the BBQ is to be positioned against a wall.

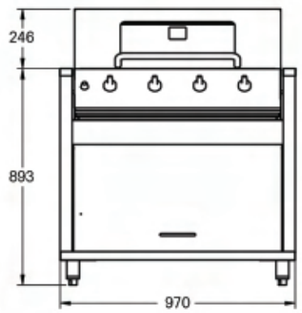

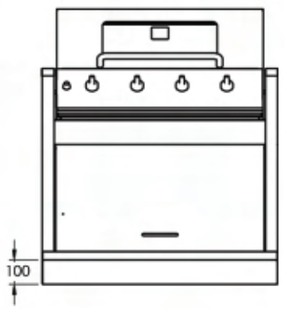

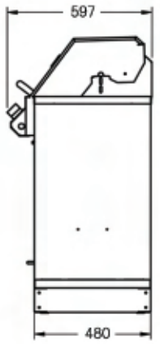

SIDE BURNERS

Side burners can be built in too. No special brackets are required - just ensure cutout measurements are right and support from below e.g. with aluminium angles. (not supplied)

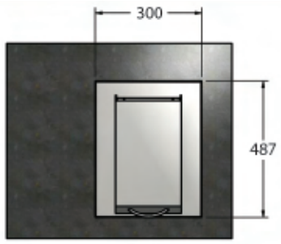

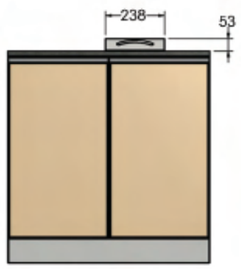

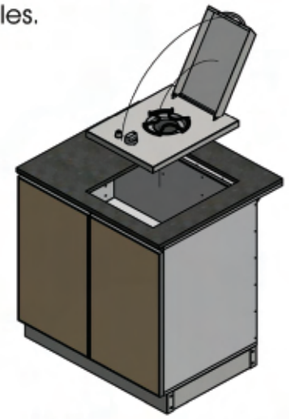

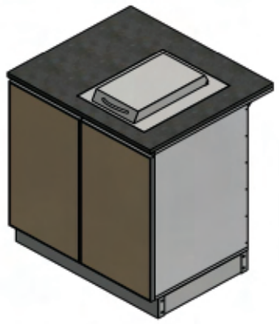

IMPORTANT: For trouble free installation order your BBQ to be shipped directly to your fabricator before cutting stone benchtops.

Phone (02) 9773 6245
sales@lifestylebbqs.com
Lifestyle The Australian Barbeque
www.lifestylebbqs.com